MEYN SADDLE TRIMMER PHYSIC MODEL

LIVE BIRD HANDLING | SLAUGHTERING | EVISCERATION | CHILLING | CUT UP | DEBONING | WEIGHING - GRADING - LOGISTICS

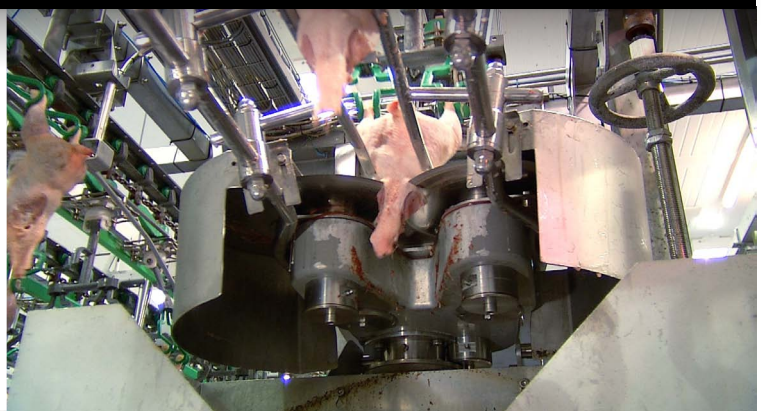

The Meyn saddle trimmer provides a consistent and exactly positioned cut of the upper back part from the saddle.

Operation

The birds are guided frontwards through the machine. Two circular knives cut the upper part of the back from the saddle.

Product in and out

Product in

Product dropped

Product out

Product highlights

- Highly consistent and accurate symmetric cut
- Cut can be set according to customers' requirements
- Easy to by-pass without touching the product

Meyn saddle trimmer

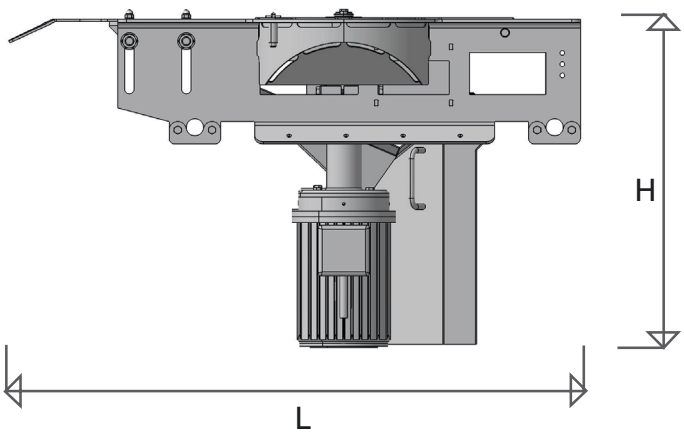

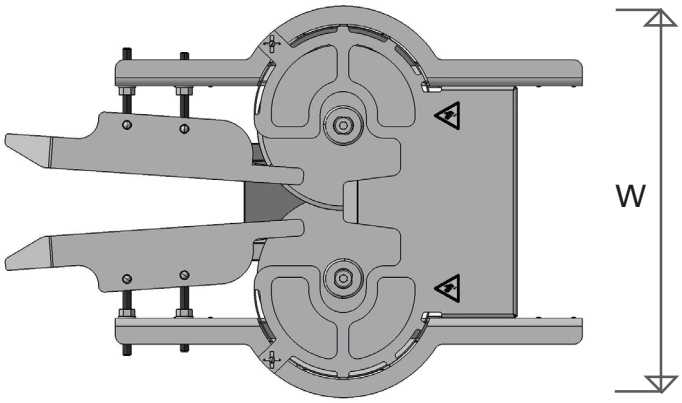

Capacity	BPH	7,500
Griller weight	kg	1.0-2.4
Length (L)	mm	1,000
Width (W)	mm	700
Height (H)	mm	590
Knife diameter	mm	2x 300
Weight	kg	95
Electric power installed	kW	2x 0.55

HEAD OFFICE
Meyn Food Processing Technology B.V.
Westeinde 6, 1511 MA Oostzaan (Amsterdam)
P.O. Box 16, 1510 AA Oostzaan
The Netherlands

Phone: +31 (0)20 2045 000
Fax: +31 (0)20 2045 001
E-mail: sales@meyn.com
www.meyn.com

Poultry Processing Solutions

The data published, under reservation of all our rights, to the most recent information at the moment of publication and are subject to future modifications.
Meyn reserves the right to modify the construction and the execution of its products at any time. No rights can be derived from this publication.